COMMITTEE OF ADJUSTMENT

City Hall, 5th floor, 71 Main Street West, Hamilton, ON L8P 4Y5

Telephone (905) 546-2424, ext. 4221, 3935

E-mail: cofa@hamilton.ca

NOTICE OF PUBLIC HEARING
Minor Variance

You are receiving this notice because you are either:

- Assessed owner of a property located within 60 metres of the subject property
- Applicant/agent on file, or
- Person likely to be interested in this application

APPLICATION NO.:	**GL/A-23:199**	**SUBJECT PROPERTY:**	212 GLOVER ROAD, GLANBROOK
ZONE:	"M2, M3" (General Business Park, Prestige Business Park)	**ZONING BY-LAW:**	Zoning By-law City of Hamilton 05-200, as Amended

APPLICANTS: **Owner:** IKEA PROPERTIES LTD.
Agent: TODD LISSO

The following variances are requested:

1. A maximum yard of 71 metres shall be permitted for a yard abutting a street instead of the requirement that the maximum yard abutting a street shall be 27 metres.

2. No landscaped area shall be required or maintained between a parking space, aisle or driveway and Dartnall Road. Instead of the requirement that a 6.0 metre landscaped area shall be required and maintained between the said parking space, aisle or driveway and a street, except for points of ingress and egress.

3. The minimum parking space size of not more than 26% of such required parking shall be a width of 2.6 metres and a length of 5.5 metres shall be permitted instead of the requirement that where 10 or more parking spaces are required on a lot, the minimum parking space size of not more than 10% of such required parking spaces shall be a width of 2.6 metres and a length of 5.5 metres.

4. Each barrier free parking space shall be permitted to have a stall width of 3.4 metres and an access aisle width of 1.7 instead of the requirement that a barrier free parking space shall have a minimum width of 4.4 metres and a minimum length of 5.8 metres.

PURPOSE & EFFECT: To facilitate the construction of a warehouse with accessory office and retail use.

Notes:

1. Please be advised the principle building shall be constructed prior to the accessory structures on the lot.

2. Please be advised portions of the property fall under conservation management. Please contact the Hamilton Conservation Authority prior to any development.

This Notice must be posted by the owner of any land which contains seven or more residential units so that it is visible to all residents.

This application will be heard by the Committee as shown below:

DATE:	**Thursday, September 7, 2023**
TIME:	**10:45 a.m.**
PLACE:	**Via video link or call in (see attached sheet for details)**
	2nd floor City Hall, room 222 (see attached sheet for details), 71 Main St. W., Hamilton
	To be streamed (viewing only) at www.hamilton.ca/committeeofadjustment

For more information on this matter, including access to drawings illustrating this request and other information submitted:

- Visit www.hamilton.ca/committeeofadjustment
- Visit Committee of Adjustment staff at 5th floor City Hall, 71 Main St. W., Hamilton
- Call 905-546-CITY (2489) or 905-546-2424 extension 4221, 4130, or 3935

PUBLIC INPUT

Written: If you would like to submit written comments to the Committee of Adjustment you may do so via email or hardcopy. Please see attached page for complete instructions, including deadlines for submitting to be seen by the Committee.

Orally: If you would like to speak to this item at the hearing you may do so via video link, calling in, or attending in person. Please see attached page for complete instructions, including deadlines for registering to participate virtually and instructions for check in to participate in person.

FURTHER NOTIFICATION

If you wish to be notified of future Public Hearings, if applicable, regarding GL/A-23:199, you must submit a written request to cofa@hamilton.ca or by mailing the Committee of Adjustment, City of Hamilton, 71 Main Street West, 5th Floor, Hamilton, Ontario, L8P 4Y5.

If you wish to be provided a Notice of Decision, you must attend the Public Hearing and file a written request with the Secretary-Treasurer by emailing cofa@hamilton.ca or by mailing the Committee of Adjustment, City of Hamilton, 71 Main Street West, 5th Floor, Hamilton, Ontario, L8P 4Y5.

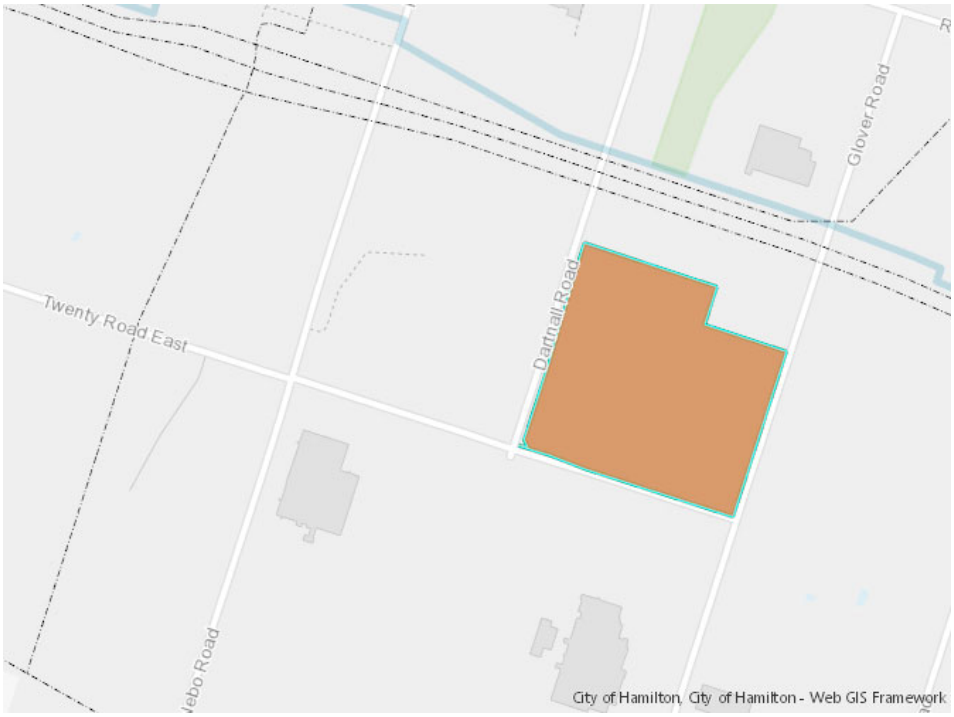

Subject Lands

DATED: August 22, 2023

_____

Jamila Sheffield,
Secretary-Treasurer
Committee of Adjustment

Information respecting this application is being collected under the authority of the Planning Act, R.S.O., 1990, c. P. 13. All comments and opinions submitted to the City of Hamilton on this matter, including the name, address, and contact information of persons submitting comments and/or opinions, will become part of the public record and will be made available to the Applicant and the general public, and may include posting electronic versions.

COMMITTEE OF ADJUSTMENT

City Hall, 5th floor, 71 Main Street West, Hamilton, ON L8P 4Y5

Telephone (905) 546-2424, ext. 4221, 3935

E-mail: cofa@hamilton.ca

PARTICIPATION PROCEDURES

Written Submissions

Members of the public who would like to participate in a Committee of Adjustment meeting are able to provide comments in writing or via email in advance of the meeting. Comments can be submitted by emailing cofa@hamilton.ca or by mailing the Committee of Adjustment, City of Hamilton, 71 Main Street West, 5th Floor, Hamilton, Ontario, L8P 4Y5. **Comments must be received by noon two days before the Hearing.**

Comment packages are available two days prior to the Hearing and are available on our website: **www.hamilton.ca/committeeofadjustment**

Oral Submissions

Members of the public are also able to provide oral comments regarding Committee of Adjustment Hearing items by participating Virtually through Webex via computer or phone or by attending the Hearing In-person. Participation Virtually requires pre-registration in advance. Please contact staff for instructions if you wish to make a presentation containing visual materials.

1. Virtual Oral Submissions

Interested members of the public, agents, and owners must register by noon the day before the hearing to participate Virtually.

To register to participate Virtually by Webex either via computer or phone, please contact Committee of Adjustment staff by email cofa@hamilton.ca. The following information is required to register: Committee of Adjustment file number, hearing date, name and mailing address of each person wishing to speak, if participation will be by phone or video, and if applicable the phone number they will be using to call in.

A separate registration for each person wishing to speak is required. Upon registering for a meeting, members of the public will be emailed a link for the Webex meeting the Wednesday afternoon before the hearing. The link must not be shared with others as it is unique to the registrant.

2. In person Oral Submissions

Interested members of the public, agents, and owners who wish to participate in person must sign in at City Hall room 222 (2nd floor) no less than 10 minutes before the time of the Public Hearing as noted on the Notice of Public Hearing.

We hope this is of assistance and if you need clarification or have any questions, please email cofa@hamilton.ca or by phone at 905-546-2424 ext. 4221.

Please note: Webex (video) participation requires either a compatible computer or smartphone and an application (app/program) must be downloaded by the interested party in order to participate. It is the interested party's responsibility to ensure that their device is compatible and operating correctly prior to the Hearing.

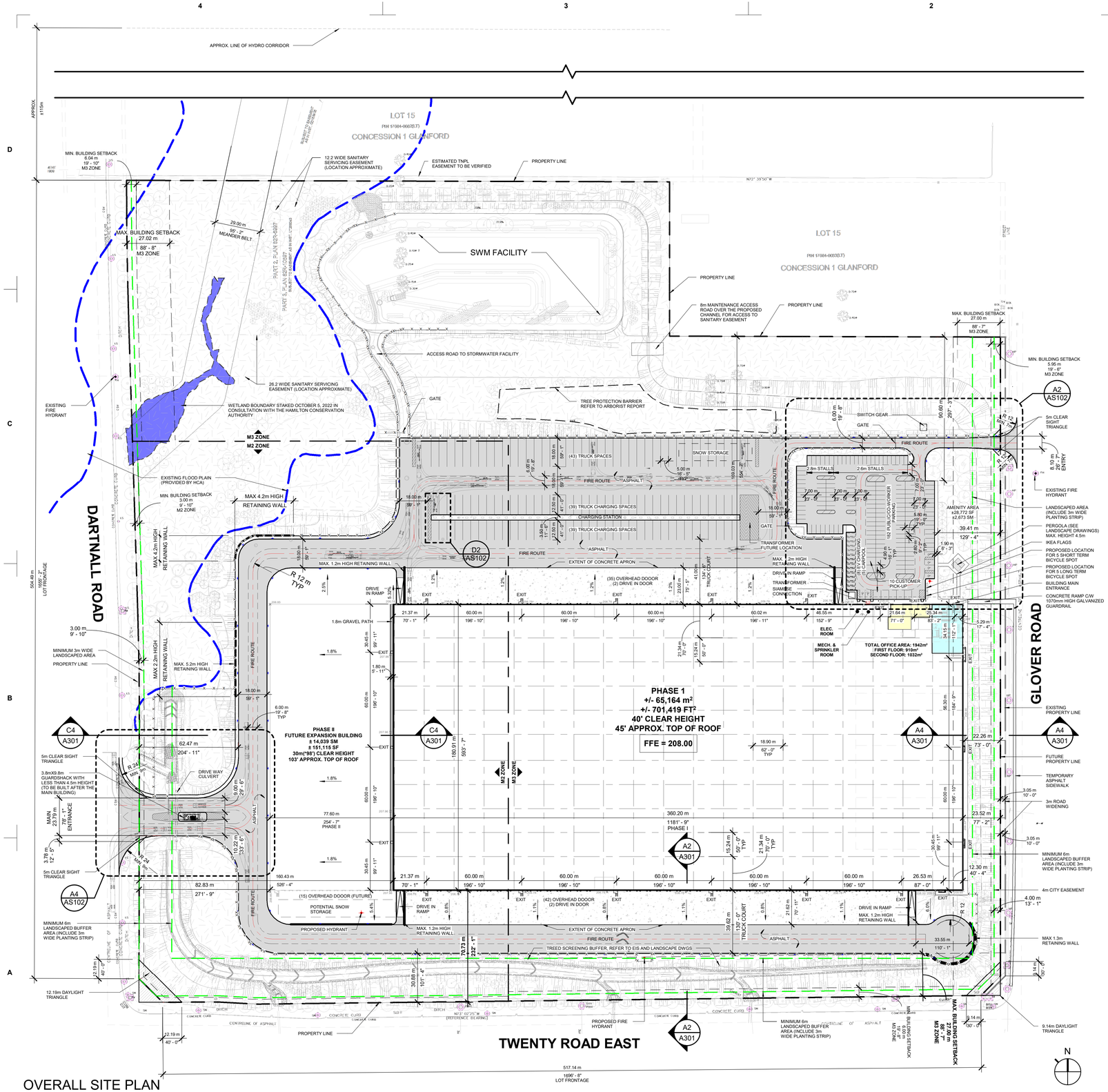

OVERALL SITE PLAN

SCALE: 1 : 1300

SITE STATISTICS

	REQUIRED - M2 ZONE	PROPOSED
PERMITTED USES	WAREHOUSE	WAREHOUSE
LANDSCAPING	3M LANDSCAPED AREA REQ'D, EXCEPT WHERE A STREET IS ABUTTING PARKING, DRIVE-WAY OR AISLE, A 6M LANDSCAPED AREA WITH 3M PLANTING STRIP IS REQUIRED.	REFER TO PLAN
MAX. BUILDING HEIGHT	NO MAXIMUM	PHASE I = 13.71m HIGH FUTURE PHASE = 31m HIGH
MINIMUM LOT AREA	4,000 SM	82,956 SM (20.5 AC)
MAXIMUM GROSS FLOOR AREA FOR INDUSTRIAL ADMINISTRATIVE OFFICE	LESS THAN 10,000 SQUARE METRES	N/A
MINIMUM YARD ABUTTING A STREET	3M	REFER TO PLAN

	REQUIRED - M3 ZONE	PROPOSED
PERMITTED USES	WAREHOUSE	WAREHOUSE
LANDSCAPING	3M LANDSCAPED AREA REQ'D, EXCEPT WHERE A STREET IS ABUTTING PARKING, DRIVE-WAY OR AISLE, A 6M LANDSCAPED AREA WITH 3M PLANTING STRIP IS REQUIRED.	REFER TO PLAN
MAX. BUILDING HEIGHT	NO MAXIMUM	PHASE I = 13.71m HIGH FUTURE PHASE = 31m HIGH
MINIMUM LOT AREA	4,000 SM	179,307 SM (44.3 AC)
GROSS FLOOR AREA FOR OFFICE \ RETAIL USE	MAXIMUM GROSS FLOOR AREA FOR OFFICE USE WITHIN AN INDIVIDUAL BUILDING, EXCLUDING ACCESSORY OFFICE, SHALL BE LIMITED TO 3,000 SQUARE METRES	1,942 SM
MAXIMUM GROSS FLOOR AREA FOR INDUSTRIAL ADMINISTRATIVE OFFICE	LESS THAN 10,000 SQUARE METRES	
YARD ABUTTING A STREET	(I) MINIMUM 6M (II) MAXIMUM 27M	REFER TO PLAN

PARKING	PROPOSED
182 TOTAL PARKING SPACES REQUIRED (AS PER CITY COMMENT)	**181** PARKING SPACES PROVIDED + **6** BARRIER FREE PARKING SPACES **TOTAL: 187 PARKING SPACES**

BUILDING STATISTICS

PHASE 1: TOTAL BUILDING AREA	65,164 SM / 701,419 SF
RETAIL	314 SM / 3,380 SF
OFFICE	1,628 SM / 17,524 SF
PHASE 2: TOTAL BUILDING AREA (FUTURE)	14,039 SM / 151,115 SF
TOTAL BUILDING AREA	79,203 SM / 852,534 SF
TOTAL LOT AREA	2,822,975 SF / 262,263 SM / 64.8 AC
TOTAL LOT COVERAGE	25%
TOTAL CAR PARKING PROVIDED	187 SPACES PROVIDED
TRAILER PARKING PROVIDED	43 SPACES
TRUCK CHARGING PROVIDED	78 SPACES

OFFICE/RETAIL AREAS (m²)

LEVEL:	RETAIL	OFFICE	TOTAL
GROUND	314m²	596m²	910m²
SECOND	0m²	1032m²	1032m²
		TOTAL AREA:	1942m²

ARCHITECTURAL GENERAL NOTES

A. PARKING SPACES, DRIVEWAYS AND WIDENINGS TO BE ASPHALT.
B. EACH LANDSCAPE PARKING ISLAND AREA IS 10m² MINIMUM.

SITE PLAN SIGNAGE

powers brown architecture
411 Richmond Street E
Suite 206
Toronto, Ontario M5A 3S5
647.931.9787
www.powersbrown.com

PROJECT TITLE

IKEA DISTRIBUTION CENTER AND PICK UP POINT

212 GLOVER RD, HAMILTON, ONTARIO L0R 1P0

A PROJECT FOR

IKEA PROPERTIES LIMITED

SITE LEGEND

- DESIGNATED FIRE ACCESS LANE - MINIMUM 6m
- PROPERTY LINE
- EXISTING PROPERTY LINE
- LANDSCAPED AREA AND CITY EASEMENT
- LINE OF PROPOSED FENCE
- CENTERLINE OF DITCH
- CENTERLINE OF FIRE LANE
- FIRE HYDRANT RE: CIVIL PLAN
- SIAMESE CONNECTION
- FIRE ROUTE SIGNAGE
- UTILITY
- A LOADING AREA DIMENSION: 3.5m X 10m
- B CENTER OF FIRE LANE: 12m MIN.
- MINIMUM 1.2m SEPARATION CITY'S RIGHT-OF-WAY AREA
- WETLAND AREA
- OFFICE AREA
- RETAIL AREA
- PARKING PAINTED STRIP
- ASPHALT
- CONCRETE PAD

ZONING KEY PLAN

△	DATE	REVISION
	2022-12-16	Issue For SPA
1	2023-03-10	Issue for addressing City Comments
2	2023-05-08	Re-Issue for SPA
3	2023-06-27	Re-Issue for SPA

PROJECT NO: 225056
DRAWN BY: TS/JLA
CHECKED BY: SS/AM

SHEET NAME

OVERALL SITE PLAN

SEAL

ONTARIO ASSOCIATION OF ARCHITECTS
RASHAD HINDI
LICENCE
6646
2023-06-27

SHEET NUMBER

AS101

COPYRIGHT © 2022 POWERS BROWN ARCHITECTURE - THIS DRAWING AND THE ARCHITECTURAL WORK DEPICTED THEREIN ARE THE SOLE PROPERTY OF POWERS BROWN ARCHITECTURE. NO COPYING OF THIS DRAWING MAY BE MADE WITHOUT THE EXPRESS WRITTEN CONSENT OF THE ARCHITECT.

C:\Users\cruz.PBA\Documents\225056_ARCH_C&S_R21_cruzFE7F5.rvt

2023-07-24 10:32:24 AM

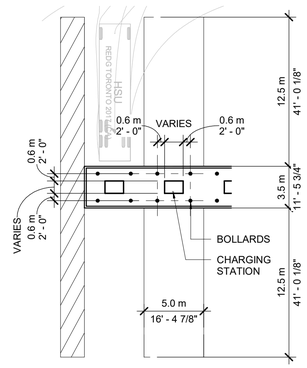

D2 ENLARGED CHARGING STATION

SCALE: **1 : 250**

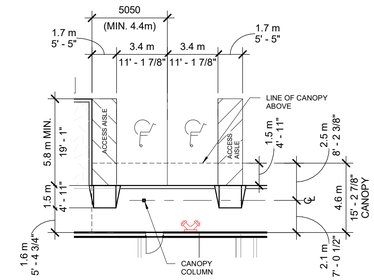

D1 ENLARGED ACCESSIBLE PARKING

SCALE: **1 : 200**

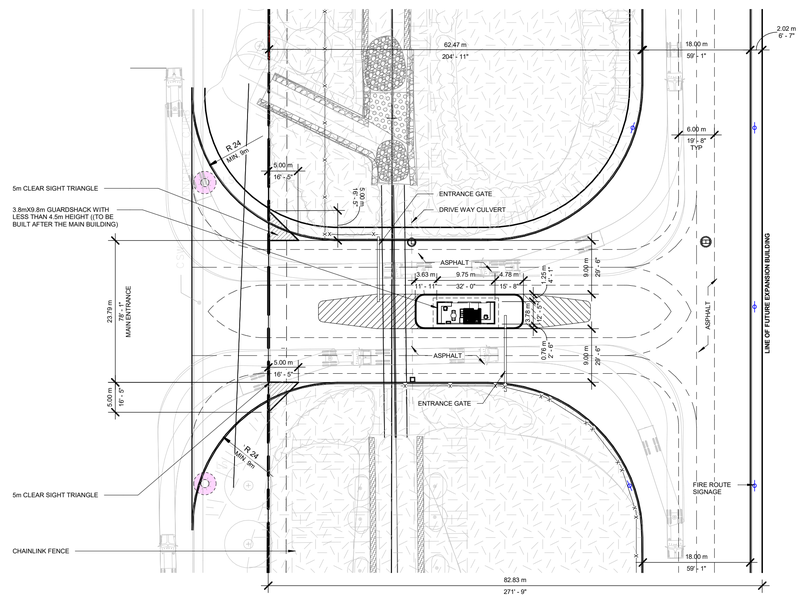

A4 ENLARGED SITE PLAN - TRUCK ENTRANCE

SCALE: **1 : 500**

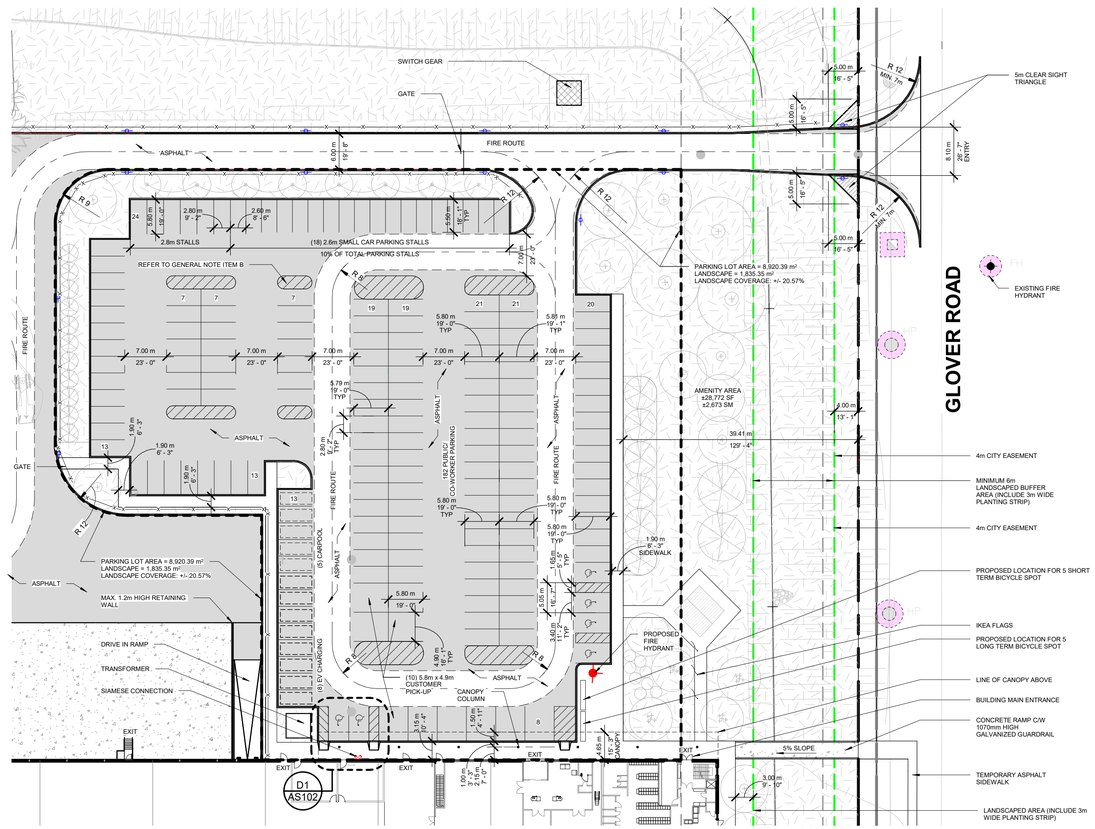

A2 ENLARGED SITE PLAN - PARKING

SCALE: **1 : 500**

powers brown architecture

411 Richmond Street E
Suite 206
Toronto, Ontario M5A 3S5
647.931.9787

www.powersbrown.com

PROJECT TITLE

IKEA DISTRIBUTION CENTER AND PICK UP POINT

212 GLOVER RD, HAMILTON, ONTARIO L0R 1P0

A PROJECT FOR

IKEA PROPERTIES LIMITED

GENERAL NOTES

- DESIGNATED FIRE ACCESS LANE - MINIMUM 6m
- PROPERTY LINE
- EXISTING PROPERTY LINE
- LANDSCAPED AREA AND CITY EASEMENT
- LINE OF PROPOSED FENCE
- CENTERLINE OF DITCH
- CENTERLINE OF FIRE LANE
- FIRE HYDRANT RE: CIVIL PLAN
- SIAMESE CONNECTION
- FIRE ROUTE SIGNAGE
- UTILITY

A LOADING AREA DIMENSION: 3.5m X 10m

B CENTER OF FIRE LANE: 12m MIN.

- MINIMUM 1.2m SEPARATION CITY'S RIGHT-OF-WAY AREA
- WETLAND AREA
- OFFICE AREA
- RETAIL AREA
- PARKING PAINTED STRIP
- ASPHALT
- CONCRETE PAD

ARCHITECTURAL GENERAL NOTES:

A. PARKING SPACES, DRIVEWAYS AND WIDENINGS TO BE ASPHALT.

B. EACH LANDSCAPE PARKING ISLAND AREA IS 10m² MINIMUM.

△	DATE	REVISION
1	2023-03-10	Issue for addressing City Comments
2	2023-05-08	Re-Issue for SPA
3	2023-06-27	Re-Issue for SPA

PROJECT NO: 225056
DRAWN BY: JLA
CHECKED BY: SB

SHEET NAME

ENLARGED SITE PLAN

SEAL

ONTARIO ASSOCIATION OF ARCHITECTS
RASHAD HINDI
LICENCE
6646
2023-06-27

SHEET NUMBER

AS102

COPYRIGHT © 2022 POWERS BROWN ARCHITECTURE - THIS DRAWING AND THE ARCHITECTURAL WORK CAPTURED THEREON ARE THE SOLE PROPERTY OF POWERS BROWN ARCHITECTURE. NO PORTION OF THIS DRAWING MAY BE COPIED WITHOUT THE EXPRESS WRITTEN CONSENT OF THE ARCHITECT.

C:\Users\cruz.PBADocuments\225056_ARCH_C&S_R21_cruzFET5.rvt

2023-07-24 10:32:35 AM

IKEA Properties Limited
1065 Plains Road East
Burlington, Ontario
L6J 7M7

Telephone: (905) 637-9440
Telefax: (905) 637-0914

Rec'd July 24/23
JH

July 24,2023

DELIVERED IN PERSON

City of Hamilton
Planning and Economic Development Department
71 Main Street West, 1st Floor
Hamilton, Ontario
L8P 4Y5

Attention: Jennifer Hann, Business Facilitator, Development Planning

Dear Ms. Hann:

RE: Application for Minor Variance
Proposed IKEA Distribution Centre and Pick Up Point
212 Glover Road, City of Hamilton

Attached please find the requisite application form, fee and site plan constituting IKEA's application for a Minor Variance to the City's Zoning to permit the development of its Customer Distribution Centre and Pick Up Point project at 212 Glover Road in the City of Hamilton. The variance will allow for the Implementation of the project in accordance with the City's recent granting of site plan approval for the development. More specifically, the application proposes a maximum 71 metre setback for the main building from Twenty Road East whereas the Zoning By-law permits a maximum yard abutting a street to be 25 metres. The increased setback of the main building is required to provide additional land between the building and Twenty Road East to accommodate a service driveway and trailer parking. The impact of the variance has been mitigated through a comprehensive design of the project on IKEA's entire land holding including enhanced landscaping, urban design and environmental features.

Please commence the circulation and review of this application at your earliest convenience.

Should you have any questions or need anything further, feel free to contact me at any time.

Regards,

Todd Lisso
Real Estate Development Leader - Canada
IKEA Properties Limited

todd.lisso@ingka.ikea.com
416-805-9666
[Encl.]

DocuSign Envelope ID: 9874C38A-8E4C-40F5-848B-F7FE6D25F5C3

Hamilton

Committee of Adjustment
City Hall, 5th Floor,
71 Main St. W.,
Hamilton, ON L8P4Y5

Phone: (905) 546-2424 ext. 4221
Email: cofa@hamilton.ca

APPLICATION FOR A MINOR VARIANCE/PERMISSION
UNDER SECTION 45 OF THE *PLANNING ACT*

1. APPLICANT INFORMATION

	NAME	MAILING ADDRESS	
Registered Owners(s)	[redacted]		
Applicant(s)			
Agent or Solicitor			

1.2 All correspondence should be sent to ☐ Purchaser ☐ Applicant ☐ Owner ☑ Agent/Solicitor

1.3 Sign should be sent to ☐ Purchaser ☐ Applicant ☑ Owner ☐ AgentSolicitor

1.4 Request for digital copy of sign ☑ Yes* ☐ No

If YES, provide email address where sign is to be sent [redacted]

1.5 All correspondence may be sent by email ☑ Yes* ☐ No

If Yes, a valid email must be included for the registered owner(s) AND the Applicant/Agent (if applicable). Only one email address submitted will result in the voiding of this service. This request does not guarantee all correspondence will sent by email.

2. LOCATION OF SUBJECT LAND

2.1 Complete the applicable sections:

Municipal Address	212 Glover Road, Glanbrook Ontario		
Assessment Roll Number	2518902120614000000		
Former Municipality	Township of Glanbrook		
Lot	Part Lot 15	Concession	One
Registered Plan Number	NA	Lot(s)	NA
Reference Plan Number (s)	62R5903	Part(s)	3

2.2 Are there any easements or restrictive covenants affecting the subject land?

☑ Yes ☐ No

If YES, describe the easement or covenant and its effect:

Sanitary Sewer Easement

3. PURPOSE OF THE APPLICATION

Additional sheets can be submitted if there is not sufficient room to answer the following questions. Additional sheets must be clearly labelled

All dimensions in the application form are to be provided in metric units (millimetres, metres, hectares, etc.)

3.1 Nature and extent of relief applied for:

Increase Maximum Yard Abutting Twenty Road to ~~70.73~~ 71.0 meters versus 27.0 meters permitted in the M3 Zone

☐ Second Dwelling Unit ☐ Reconstruction of Existing Dwelling

3.2 Why it is not possible to comply with the provisions of the By-law?

Building needs to be set further back from Twenty Road to allow for a service driveway and fireroute, drainage channel and row of trailer parking.

3.3 Is this an application 45(2) of the Planning Act.

☐ Yes ☑ No

If yes, please provide an explanation:

4. DESCRIPTION OF SUBJECT LAND AND SERVICING INFORMATION

4.1 Dimensions of Subject Lands:

Lot Frontage	Lot Depth	Lot Area	Width of Street
342.9m	502.66m	262,238sm	20m

4.2 Location of all buildings and structures on or proposed for the subject lands: (Specify distance from side, rear and front lot lines)

Existing:

Type of Structure	Front Yard Setback	Rear Yard Setback	Side Yard Setbacks	Date of Construction
None	NA	NA	NA	

Proposed:

Type of Structure	Front Yard Setback	Rear Yard Setback	Side Yard Setbacks	Date of Construction
Warehouse	~~17.52m~~	~~166.43m~~	70.73m (s) and 169.03m (n)	05/29/2024
	22.26m	160.43m		

4.3. Particulars of all buildings and structures on or proposed for the subject lands (attach additional sheets if necessary):

Existing:

Type of Structure	Ground Floor Area	Gross Floor Area	Number of Storeys	Height
NA				

Proposed:

Type of Structure	Ground Floor Area	Gross Floor Area	Number of Storeys	Height
Warehouse	65,164sm	65,164sm	One	13.71m

4.4 Type of water supply: (check appropriate box)

- ☑ publicly owned and operated piped water system
- ☐ privately owned and operated individual well
- ☐ lake or other water body
- ☐ other means (specify) _____

4.5 Type of storm drainage: (check appropriate boxes)

- ☐ publicly owned and operated storm sewers
- ☐ swales
- ☑ ditches
- ☐ other means (specify) _____

4.6 Type of sewage disposal proposed: (check appropriate box)

- ☑ publicly owned and operated sanitary sewage
- ☐ system privately owned and operated individual
- ☐ septic system other means (specify) _____

4.7 Type of access: (check appropriate box)

- ☐ provincial highway
- ☐ municipal road, seasonally maintained
- ☑ municipal road, maintained all year
- ☐ right of way
- ☐ other public road

_____

4.8 Proposed use(s) of the subject property (single detached dwelling duplex, retail, factory etc.):
IKEA Distribution Center and Pick Up Point

4.9 Existing uses of abutting properties (single detached dwelling duplex, retail, factory etc.):
Industrial - north and west. Vacant- south and east

7 HISTORY OF THE SUBJECT LAND

7.1 Date of acquisition of subject lands:
July 18, 2022

7.2 Previous use(s) of the subject property: (single detached dwelling duplex, retail, factory etc)
Agricultural

7.3 Existing use(s) of the subject property: (single detached dwelling duplex, retail, factory etc)
Vacant

7.4 Length of time the existing uses of the subject property have continued:
Unknown- estimate 20 years

7.5 What is the existing official plan designation of the subject land?

Rural Hamilton Official Plan designation (if applicable): NA

Rural Settlement Area: NA

Urban Hamilton Official Plan designation (if applicable) Business Park

Please provide an explanation of how the application conforms with the Official Plan.
Application will allow for a warehouse building to be constructed which is a permitted use under the Official Plan designation

7.6 What is the existing zoning of the subject land? M2 and M3

7.8 Has the owner previously applied for relief in respect of the subject property?
(Zoning By-lawAmendment or Minor Variance)

☐ Yes ☑ No

If yes, please provide the file number: M2 and M3

7.9 Is the subject property the subject of a current application for consent under Section 53 of the *Planning Act*?

☐ Yes ☑ No

If yes, please provide the file number: _____

7.10 If a site-specific Zoning By-law Amendment has been received for the subject property, has the two-year anniversary of the by-law being passed expired?

☐ Yes ☐ No

7.11 If the answer is no, the decision of Council, or Director of Planning and Chief Planner that the application for Minor Variance is allowed must be included. Failure to do so may result in an application not being "received" for processing.

8 ADDITIONAL INFORMATION

8.1 Number of Dwelling Units Existing: 0

8.2 Number of Dwelling Units Proposed: 0

8.3 Additional Information (please include separate sheet if needed):

11 COMPLETE APPLICATION REQUIREMENTS

11.1 All Applications

- [x] Application Fee
- [x] Site Sketch
- [x] Complete Application form
- [x] Signatures Sheet

11.4 Other Information Deemed Necessary

- [x] Cover Letter/Planning Justification Report
- [ ] Authorization from Council or Director of Planning and Chief Planner to submit application for Minor Variance
- [ ] Minimum Distance Separation Formulae (data sheet available upon request)
- [ ] Hydrogeological Assessment
- [ ] Septic Assessment
- [ ] Archeological Assessment
- [ ] Noise Study
- [ ] Parking Study

_____

_____